ISSN (O): 2393-8609

International Journal of Aerospace and Mechanical Engineering

Volume 1 – No.1, September 2014

Lug Attachment of Wing-Fuselage

Amardeep Singh
Student (B.tech, Aeronautical)
Gurukul Vidyapeeth Institute of Engineering and Technology
amarsingh2453@ymail.com

Jashandeep Singh
Student (B.tech, Aeronautical)
Gurukul Vidyapeeth Institute of Engineering and Technology
jashandeep07@hotmail.com

Paviterpuneet Singh
Student (B.tech, Aeronautical)
Gurukul Vidyapeeth Institute of Engineering and Technology
paviterpuneet@yahoo.com

ABSTRACT

Aircraft is a highly complex flying structure generally transport aircraft undergoes nominal maneuvering flights. During flight when the max. Lift is generated the wings of aircraft will undergo highest bending moment. The bending moment will be max. At the roots of the wing which caused highest stress at this location.

Wings are attached to the fuselage structure through wing – fuselage lug attachment the bending moment and shear loads from the wing are transferred to the fuselage through the attachment joints. A method of joining a wing to an aircraft fuselage by forming a series of pinned lug between a fuselage side and a wing side of a wing box structure .The joint forming process includes providing a single row of lug on one side of the joint to be formed and providing a respective double row of lug on the other side of the joint to be formed.A gap between opposing lugs of the double row varies along the row.The wing side and the fuselage side of the wing box structure are brought together such that the lugs of the single row located within the respective gaps between opposing lugs of double row and the lugs are pinned to form the series of pinned lug joints.

Rarely an aircraft will fail due to a static overload during its service life.For the continued airworthiness of an aircraft during its entire economic service life,fatigue and damage tolerance design,analysis,testing and service experience correlation play a pivotal role.

Keywords

Aircraft liftloads, bendingmoment, wing – fuselage attachment. There are 3 joints used for wing fuselage attachments

*truss links

*lug

*pressure seals

1. INTRODUCTION

Introduction to Lug attachment

Lugs are connector type element widely used as structural supports for pin connections.in the past ,the lug was overdesigned since weight and size requirements were for the most part unrestricted. However ,the refinement of these requirements have necessitated conservative methods of design.This section presents static strength analysis procedure for uniformly loaded lugs bushings, for double shear joints, and for single shear joints subjected to axial, transverse, or oblique loading.

Lugs are the primary structural element in airframe structure that are widely used in connecting different componentsof the airframe for example here we are going to study about wing – fuselage attachment through LUG.

Failures of lug may lead to the catastrophic failure of the whole structure attachment lug can be some of the most fracture critical components in aircrafts structure,and he consequences of structural lug failure can be very sewer. Therefore, it is important to design criteria and analysis methods to ensure the damage tolerance of aircraft attachment lugs.

2. MATERIAL SPECIFICATION

Selection of aircraft materials depends upon any consideration, which can in general be categorized as cost and structural performance. Cost includes initial material cost, andmaintenancecost. The key material properties that are pertinent to maintenance cost and structural performance are

*density

*stiffness

*strength

*durability

*damage tolerance

*corrosion

A combination of various materials is often necessaryi.e. alloys are used.

Commonly 2 alloys are used steel alloys and aluminium alloys.

Aluminium 7075-T6 is preferred more than 2024-T3, why?

Because:

1.2024-T3 use for high strength tensile application.it has best fracture toughness and slow crack growth rate and good fatigue life.it has low short transverse properties and low stress corrosion resistance,

ISSN (O): 2393-8609

International Journal of Aerospace and Mechanical Engineering

Volume 1 – No.1, September 2014

2.7075-T6 has higher strength than 2024,lower fracture toughness .uses for tension application where fatigue is not critical .it also have low short transverse properties and low stress corrosion resistance,

3.MANUFACTURING PROCESS

What is manufacturing?

The process of converting raw materials, components, or parts into finished goods that meet a customer's expectations or specifications. Manufacturing commonly employs a man – machine setup with division of about in large scale production

Forging--Forging is a manufacturing process involving the shaping of metal using localized compressive forces. Forging is classified according to temperature at which it is performed:"cold", "warm", or "hot" forging.

Casting—Casting is a manufacturing process by which a liquid material is usually poured into a mold,which contains a hollow cavity of desired shape, and then allowed to solidify. The solidified part is also known as casting, which is ejected or broken out of mold to complete the process.

3. GOEMETRICALCONFIGURATIONS

The wing fuselage attachment bracket considered for study in catia is shown below:

The attachment bracket consist of a lug and a portion of spar connected to each other with several bolts, the lug consist of 2 pin holes along with the integrated top flange and bottom flange which will be connected to the spar.

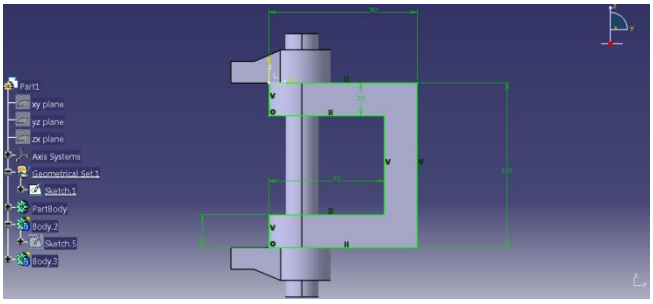

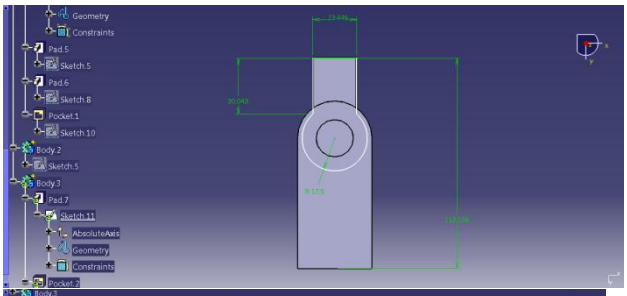

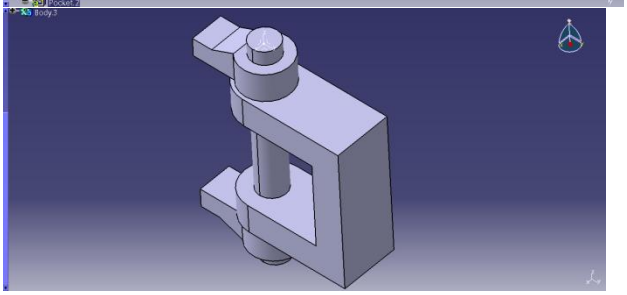

4. LOADS ON WING –FUSELAGE ATTACHMENT

Most of the wing bending is carriedby the spars in the wing structure. The maximum bending moment occur at the root of the spar where wing and fuselage component will be attached to each other.

4.1 load calculation for wing fuselage lug attachment

1. Aircraft category =medium size aircraft

2.Total weight of the aircraft=5500kg=53955N

3. Load factor considered in design=3g

4. Design limit load on the structure=3*53955=1.61865*E5N

5. Design ultimate load =1.61865*E5*1.5=2.42797*E5N

6. Distribution of lift load on fuselage and wing=20%and 80%

7. Total load acting on wings=2.42797*E5*0.8=194.2376*E3N

8. Load acting on each wing = (194.2376*E3N)/2=97.1188*E3N

9. Number of spar in the wing=2

10. Load sharing by spars is

A. Spar 1=40%

B. Spar 2=60%

11. The wing fuselage attachment considered for the current analysis is at spare.

Therefore,load acting on the spare=97.1188*E3*040=38.84752*E3N

Total bending momentum acting at the root of the beam=38.84752*E3N*750mm=29.13564*E6N/mm2

5. FUTURE WORK

Lug attachment will be modified by the finite element method (FEM) in future. Proper analysis will be done through FEM and attachment of wing and fuselage will be shown through lug.

6. ACKNOWLEDGMENTS

We wish to express our most sincere gratitude to everyone who helped us in our research efforts and acknowledge the initial encouragement received from Mr.SandeepSharma.

7. REFERENCES

[1] Various research papers on wing fuselage attachment structure",Jacobs and Associate Inc.. June 1997

[2] Airframe- structural- design by Michael Chun –Yung Niu Lockheed aeronautical systems company Burbank, California.

[3] Brown, L. D., Hua, H., and Gao, C. 2003. A widget framework for augmented interaction in SCAPE.

[4] Bruhn, E. F.. "Analysis and Design of flight vehicle